ProSeries 2

Large Aperture Scan Head

Product Highlights

Our ProSeries 2 large aperture, 2-axis scan head is ideal for plastic welding, micromachining, drilling and other applications that require fast marking speed or high position accuracy. The enclosed, plug-and-play configuration employs advanced moving magnet galvanometers and precision servo drivers for high performance. Each unit supports industry-standard electrical interfaces for easy OEM system integration. The scan head may be configured with F-Theta lenses to support a variety of field sizes. All of our scan heads are designed and optimized to operate in conjunction with Cambridge Technology controllers and software.

Obtain our same high-performance scanning technology in a large aperture format

- Supports laser beam scanning for 20 mm and 25 mm apertures sizes
- High position accuracy ensures high quality output
- High processing speeds that maximize scanning throughput

CAMBRIDGE TECHNOLOGY
A Novanta Company
www.CambridgeTechnology.com

ProSeries 2

Large Aperture Scan Head

Product Specifications	PS2-20	PS2-25
Mirror Aperture Size (mm)	20	25
Scan Angle	±20°	±15°
Beam Displacement (mm)	25.5	29.8
Step Response Time 1% of Full Scale[1] (ms)	0.8	0.9
Step Response Time 10% of Full Scale[1] (ms)	1.15	3.0
Typical Marking Speed[2] (m/s)	1.0	0.9
Typical Positioning Speed[2] (m/s)	11	11
Typical Writing Speed[2,3] (cps, good quality)	320	300
Typical Writing Speed[2,3] (cps, high quality)	290	270
Repeatability[4] (µrad)	12	12
Nonlinearity (<0.8% over ±20°)	0.1%	0.1%
Weight (kg, approximate)	5.0	5.0

Shared Specifications	
Wavelength Options	355 nm / 532 nm / 1030 nm - 1080 nm / 9.4 µm - 10.6 µm Broadband Coatings: 350 nm - 12 µm
Gain Error	<5 mrad
Zero Offset	<5 mrad
Skew	<1.5 mrad
Resolution	12 µrad
Long Term Offset Drift[5]	<100 µrad
Long Term Scale Drift[5]	<100 ppm
Temperature Offset Drift	<20 µrad/°C
Temperature Scale Drift	<50 ppm/°C
Analog Communication	±10V
Digital Communication	XY2-100 Protocol
Command Resolution	16-bit
Power Requirements	± 15V, 5A RMS, 10A max
Operating Temperature	+15°C to +35°C

Notes:
All angles are in optical degrees, unless otherwise specified. All specifications are subject to change without notice.

References:
1.Settling to within 1% of position. **2.** With 160 mm F-Theta lens. **3.** Single stroke 1 mm characters, SIMPLEX font. **4.** <3 sigma from mean, per axis. **5.** During 24 hours of operation after 30 minutes of warm up, per axis.

ProSeries 2

Large Aperture Scan Head

PS2-20

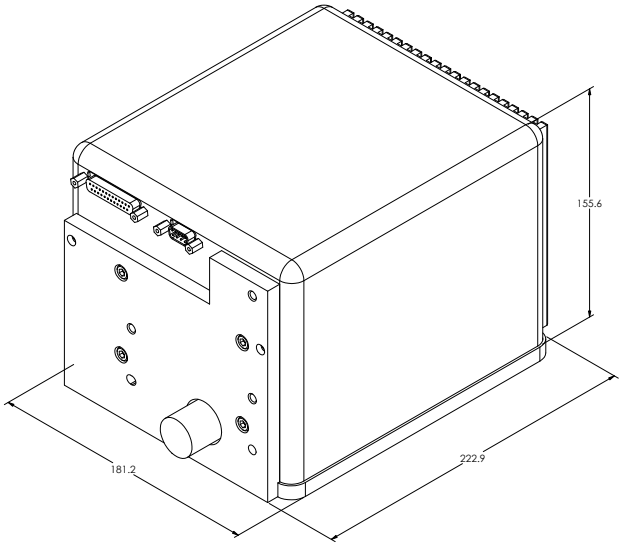

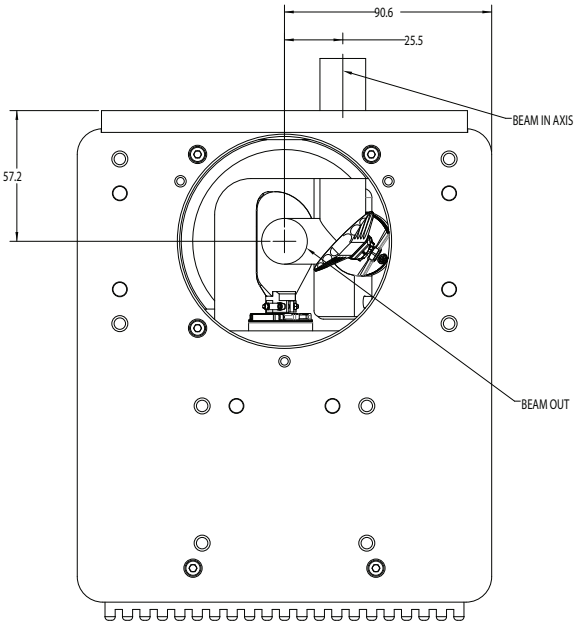

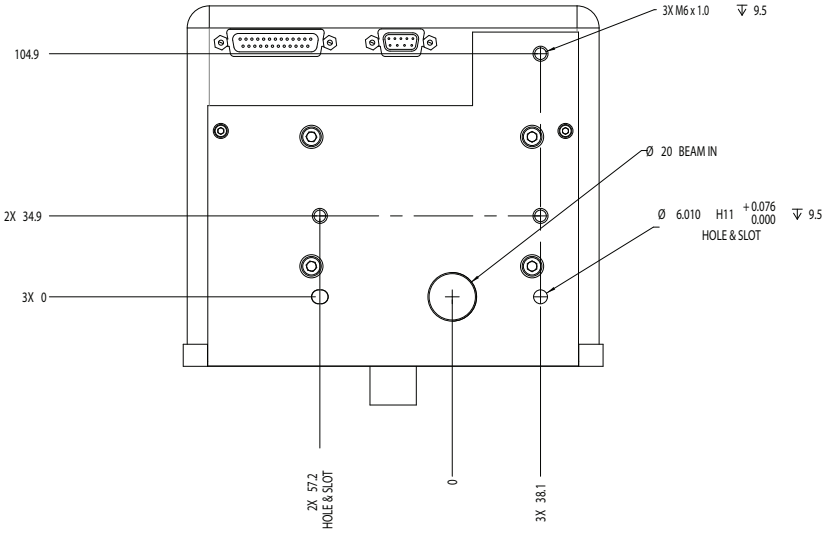

Notes:
All dimensions are in mm, unless otherwise noted. All specifications are subject to change without notice.

CAMBRIDGE TECHNOLOGY
A Novanta Company
www.CambridgeTechnology.com

ProSeries 2

Large Aperture Scan Head

PS2-25

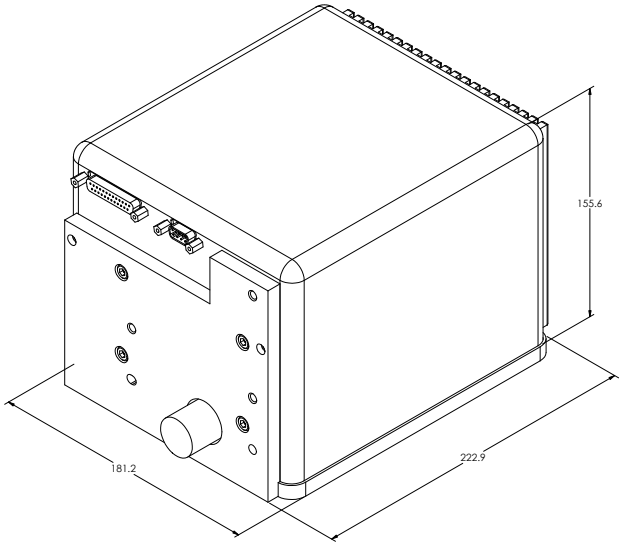

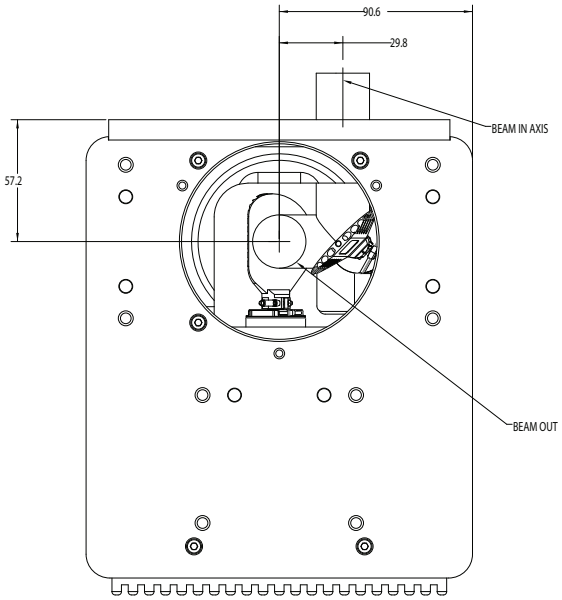

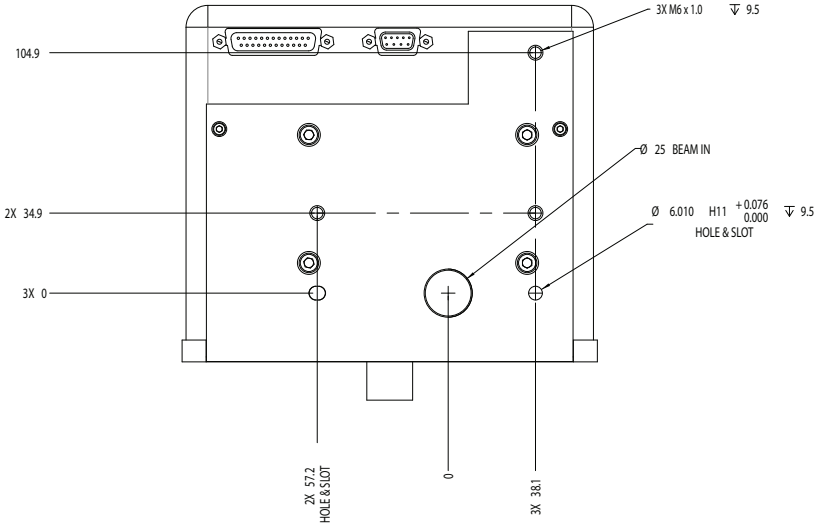

Notes:
All dimensions are in mm, unless otherwise noted. All specifications are subject to change without notice.

About Cambridge Technology

With close to 50 years of expertise, Cambridge Technology designs, develops, and manufactures innovative beam steering solutions including polygon- and galvanometer-based optical scanning components, 2-axis and 3-axis scan heads, scanning subsystems, high power scanning heads, and controlling hardware and software. We excel in collaborating with our key OEM partners to engineer products that meet their needs from the largest engineering solution to the smallest component. Key market applications include advanced industrial processes like additive manufacturing, laser converting, laser marking, and via-hole drilling, and medical applications such as laser treatment and optical coherence tomography. Cambridge Technology is a Novanta company.

CAMBRIDGE TECHNOLOGY: AMERICAS
+1 (781) 266 5800 | support-us@cambridgetechnology.com

CAMBRIDGE TECHNOLOGY: EMEA
+49 (0)89 31707 0 | support-eu@cambridgetechnology.com

CAMBRIDGE TECHNOLOGY: JAPAN & KOREA
+81 (3) 5753 2462 | support-jp@cambridgetechnology.com

CAMBRIDGE TECHNOLOGY: CHINA, SINGAPORE, MALAYSIA, THAILAND & INDONESIA
+86 (512) 6283-7080 | support-cn@cambridgetechnology.com

CAMBRIDGE TECHNOLOGY
A Novanta Company
www.CambridgeTechnology.com