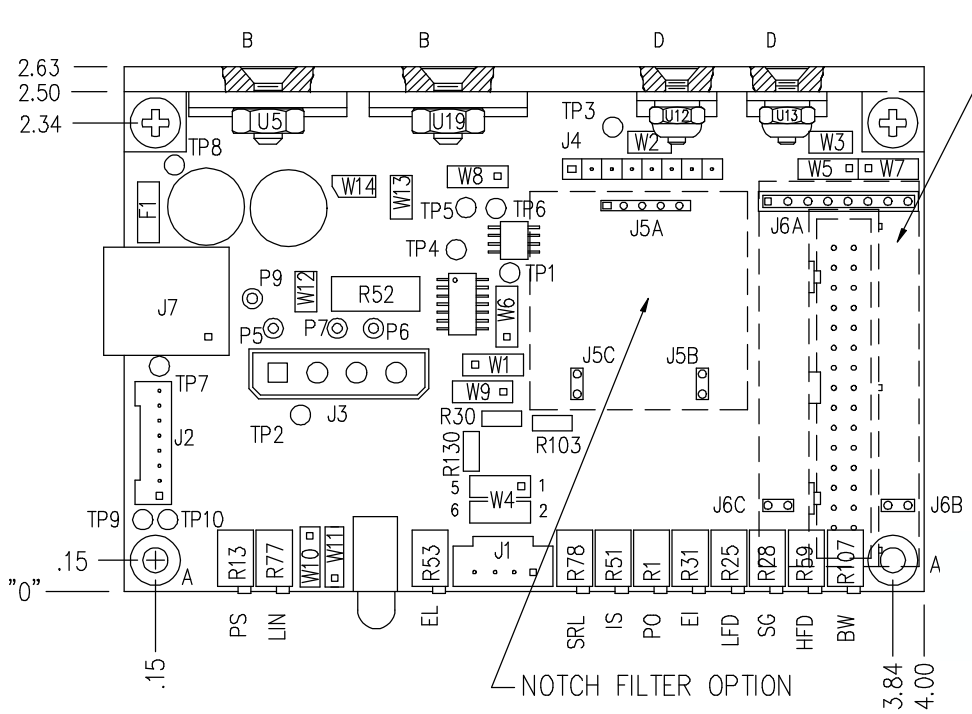

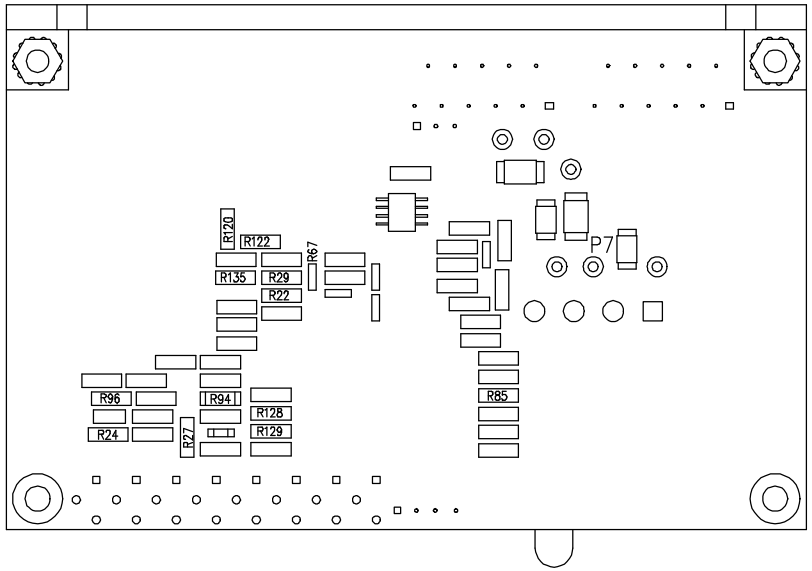

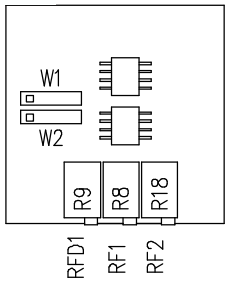

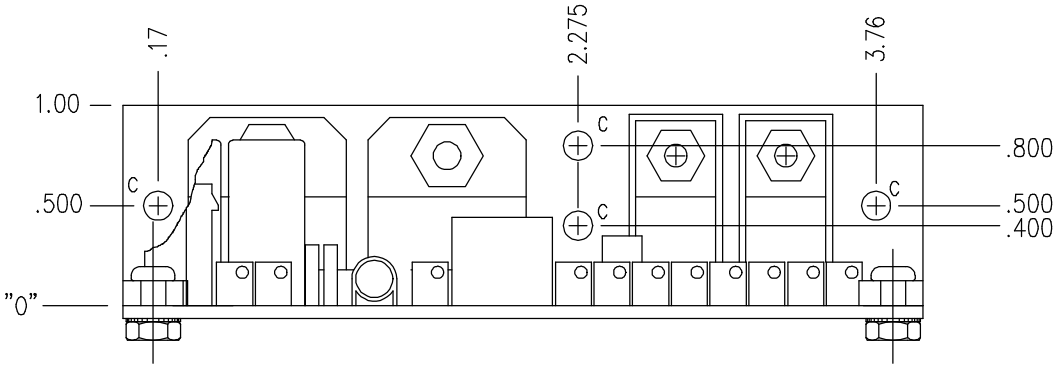

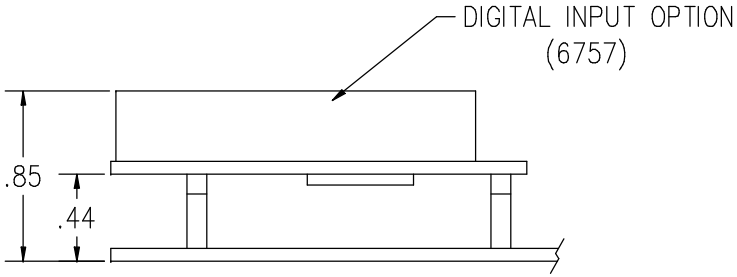

HOLE	QTY	SIZE
A	2	ø.125 THRU
B	2	ø.145 THRU, 82°C'SINK TO ø.300 (FARSIDE)
C	4	ø.145 THRU
D	2	ø.125 THRU, 82°C'SINK TO ø.250 (FARSIDE)

NOTES:

1. FOR ALL CONNECTORS, SQUARE PAD DENOTES PIN "1".

For Reference Only

Do NOT use for your design!

Contact CTI for the latest information on the product of your interest.